TS-830S BLOCK D

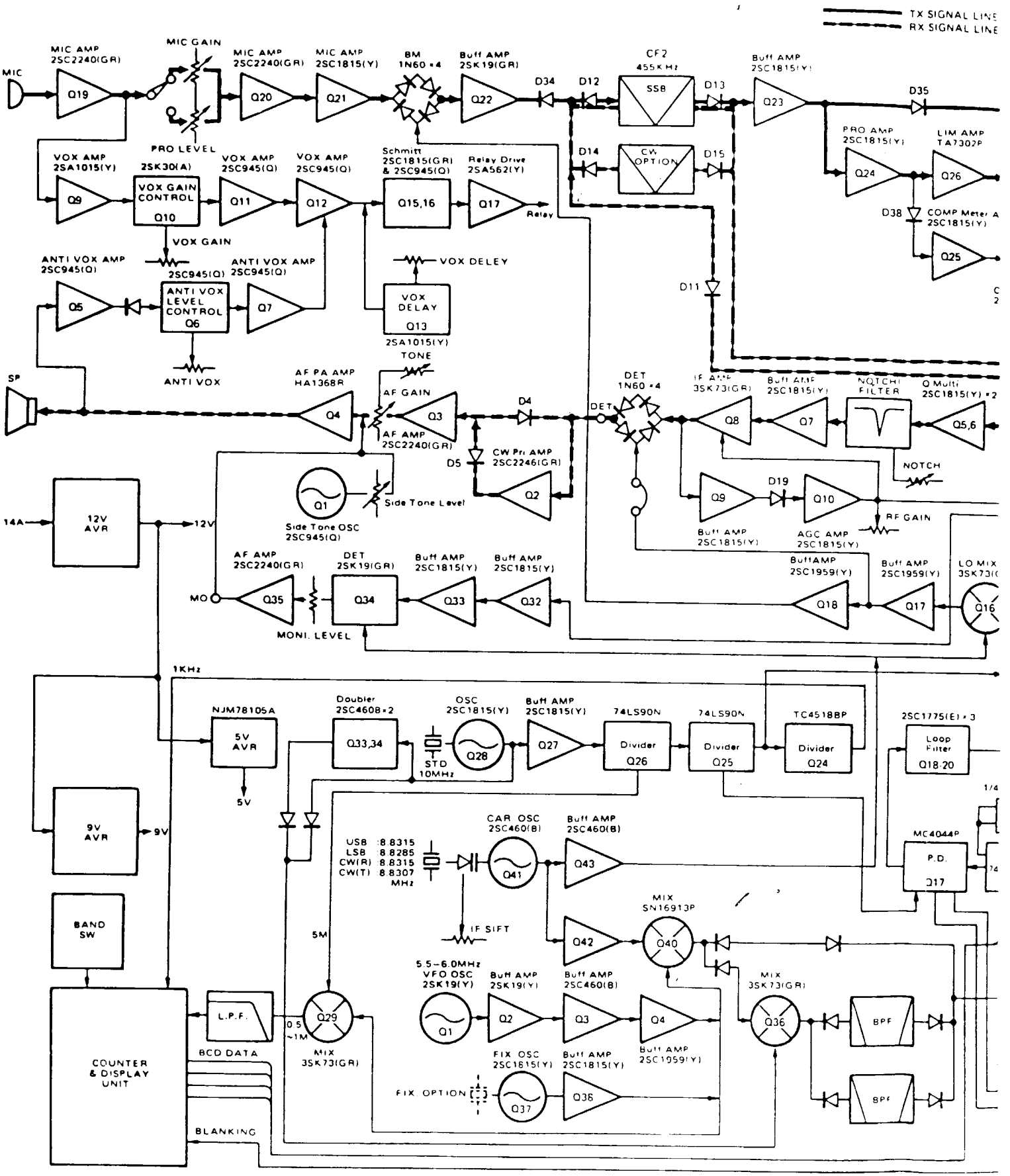
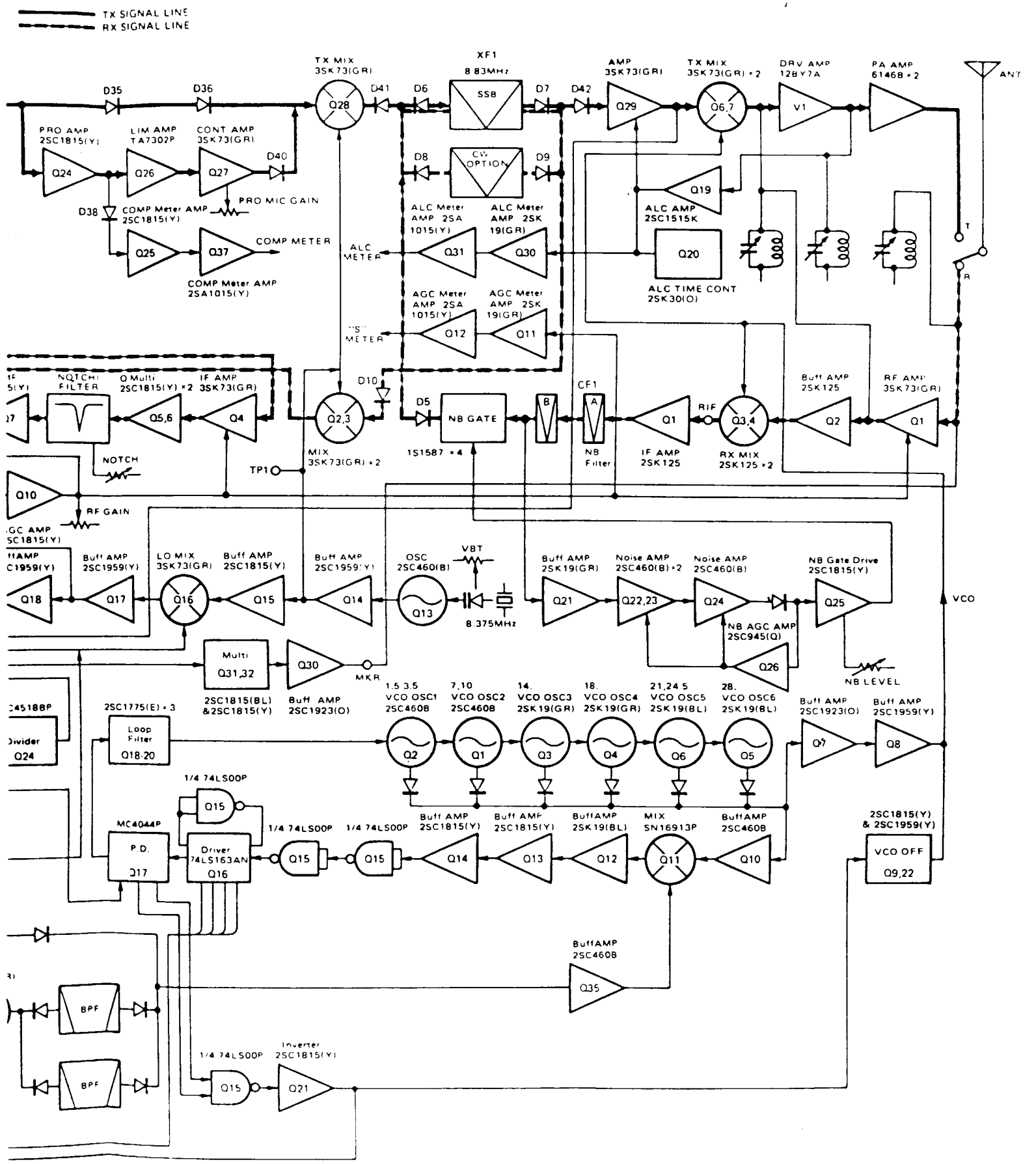
S-830S BLOCK DIAGRAM